Bribie and District Woodcrafters Association Inc.

Basic Woodturning

Amended November 2022

BASIC WOODTURNING

Table of Contents

INTRODUCTION

The wood lathe is perhaps the oldest of all woodworking machines. Primitive forms of the tool were used by the Etruscans in the 9th Century BC, and throughout its long history, the tool has been used in virtually the same way. Somewhat like a potter's wheel laid on its side, the lathe spins a wood blank while a turner shapes the wood with chisel like tools. The lathe makes it possible to shape wood into flowing round forms in a way other tools cannot.

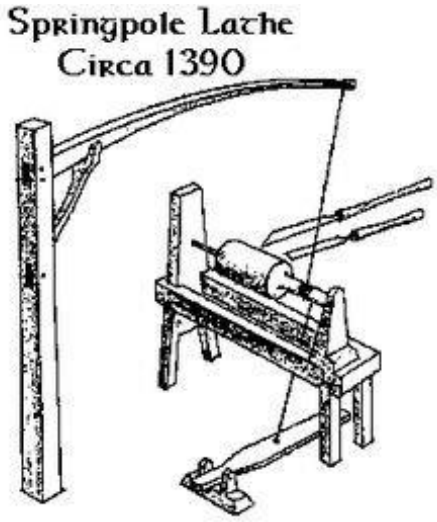

The earlier lathes were human powered, with a piece of cord wrapped around the blank, connect to a springy sapling and a treadle. With a few modifications, this evolved onto the pole lathe popular with British bodgers, who travelled from town to town, working freshly fallen trees into chairs. Flywheels and drive-shafts were added to the design, and the lathe emerged as one of the engines behind the mass production of Windsor chairs in the mid-18th Century. Turning became a specialist trade.

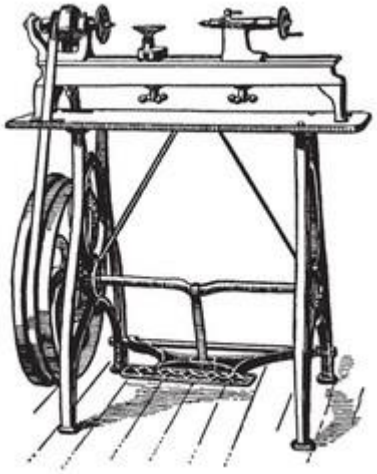

With the coming of the Industrial Revolution, heavy cast engine powered lathes forever took the elbow grease out of turning. With minor changes, these lathes were essentially the same as those used by modern woodworkers. Indeed, many woodturners prefer older lathes to the newer ones, refurbishing them and setting them on stands of their own making.

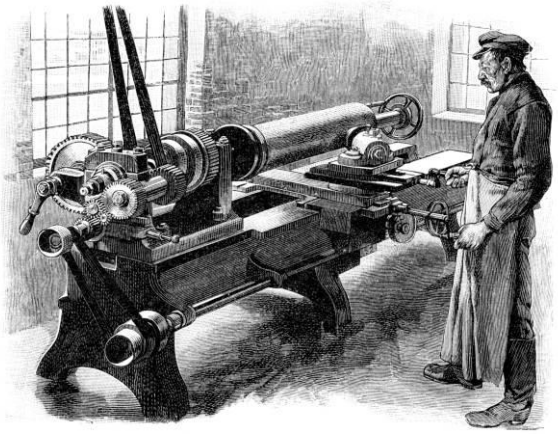

The lathe remains one of the most popular woodworking tools, and woodturning is a craft with an intriguing cachet, like carving and marquetry. It is not hard to understand why: *a lathe enables a woodworker to turn something beautiful from nothing more than a stick of wood.*

ANATOMY OF A LATHE

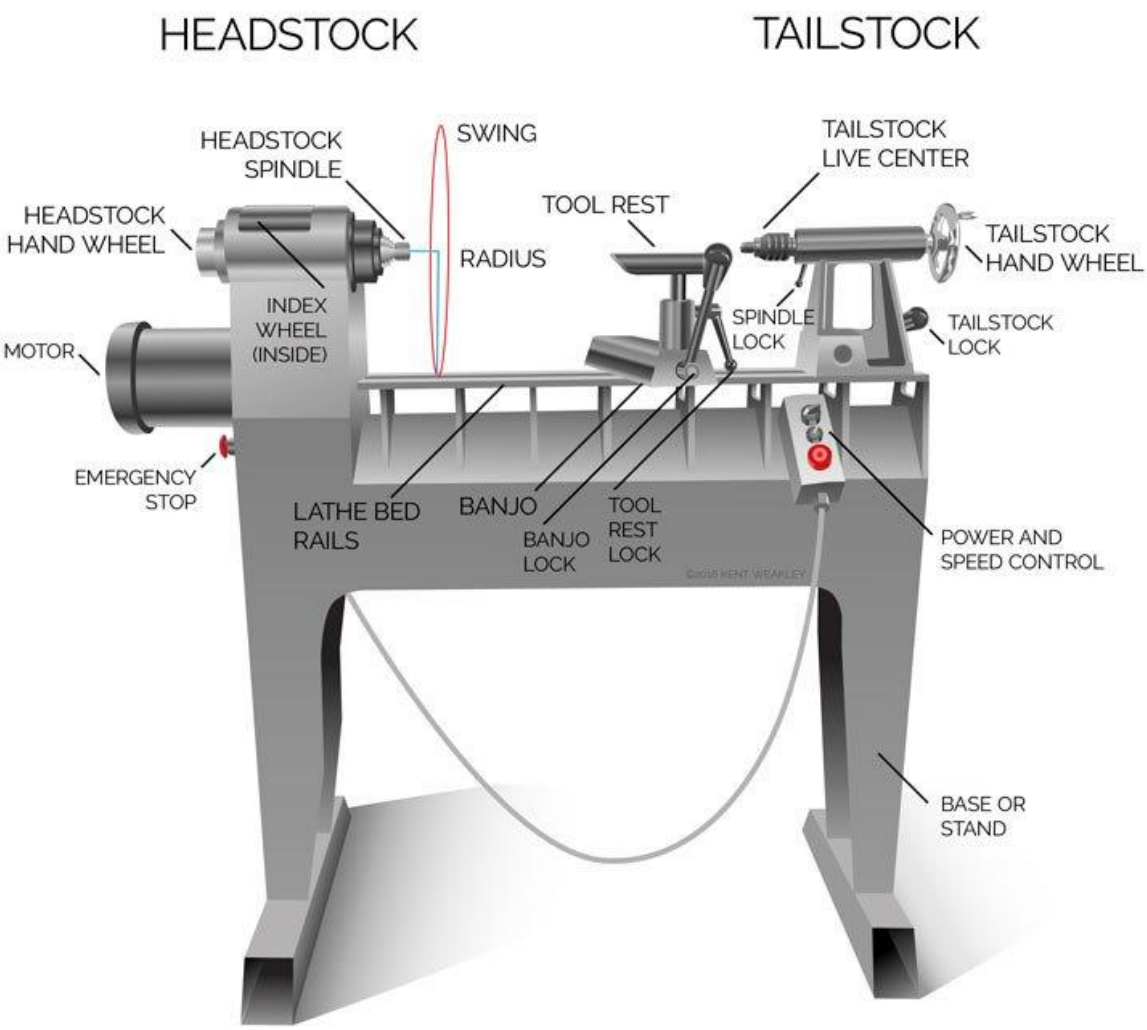

Lathe Parts

- **Headstock**
  Perhaps the most important part of the lathe. It's quality controls the working performance and the span of the machine. The headstock holds blanks for both faceplate and spindle work: central shaft that turns spindle is attached to the motor via drive belt. Removable cover allows access to drive belt and indexing head.

- **Faceplate**
  Standard lathe attachment; blank is fastened to faceplate which is threaded into headstock.

- **Tool Rest**
  Provides support and fulcrum point for tools when turning. Height of rest can be adjusted and locked in place with lever; Rest can be rotated to the desired angle for faceplate turning.

- **Tailstock**
  Secures on end of blank for spindle turning. Slides along bed to accommodate blanks of different lengths.

- **Locking Lever**
  Locks tailstock in place.

- **Tailstock Spindle**
  A Hollow shaft with a reverse taper that holds centres in a friction fit to turn spindle work; turning tailstock hand wheel retracts or advances the spindle.

- **Spindle Lock**
  Locks tailstock spindle in place.

- **Tailstock Handwheel**
  Advances or retracts tailstock spindle to secure workpiece.

- **Tool Base (aka Banjo)**
  Slides along lathe bed between headstock and tailstock to position the tool rest with respect to workpiece; locking lever secures base to bed.

- **Bed**
  Made of cast iron, tubular steel tracks or solid steel bar, accurately machined so that the tool base and tailstock slide smoothly. As with the headstock its quality and rigidity are important to overall lathe performance.

- **On/Off Switch**
  Switches the lathe on and off. It is also important to have another method to turn off the lathe as a safety feature, this can be second switch, a push button floor control, or just turning the power off.

- **Variable Speed Control lever (this is not available on all lathes)**
  Increases or decreases the speed of spindle rotation without shutting off the lathe; pull out and turn to change speed.

- **Stand**
  As supplied by manufacturer, fixed to the floor where practical, or a solid bench.

Headstock Assembly

- **Fixed Width Pully**
  Features four adjustable steps. On lathes with variable speed adjustment, spindle speed is changed by manually moving the belt from one step to another; on variable speed models, belt is left as is.

- **Indexing Head**
  Enables spindle to be rotated a pre-set number of degrees by hand when carving flutes, reeds or spirals turning on blanks. Features a ring of 60 holes spaced 6° apart around the head and another eight holes spaced 45° apart; indexing pin is inserted in holes when carving is being done and taken out to rotate spindle. Lathe must be switched off during entire operation.

- **Indexing Pin**
  Fits into the indexing head; inserted it holds the headstock spindle steady and retracted to rotate spindle by hand.

- **Spindle Nut**

  Loosen to remove spindle for replacing the belts and bearings.

- **Headstock Spindle**
  Threaded hollow solid shaft to which various chucks are screwed in place: ranges from 13mm (½″) to 38mm ($1^{1/2}$″) in diameter. Hollow is Morse tapered to hold various centres with friction.

Drive Assembly

- **Variable Speed Pully Mechanism**
  Can be adjusted to set the lathe to different spindle speeds while the lathe is running.

- **Motor Bracket**
  Holds motor in position to ensure correct belt tension; loosen to replace belts or change speed on the fixed width pulley.

Working Height

- It is preferable that the height of the lathe at the drive centres be no lower than your elbow.

Maintenance

- Clean the bed thoroughly; apply WD40 or equivalent occasionally (as a rust preventative).
- Clean headstock and rest, do not apply any lubricant.
- Essentially, do not apply any lubricant to the cam locks (locking levers).
- Check all nuts, bolts and grub screws to ensure they are tight. This applies particularly to pulleys, securing bolts on the bed and motor mounts.
- Check V belts for fraying or damage and replace as necessary.
- Adjust belt tension by altering the motor position. In the case of variable speed belt tension, use the recommendations from the manufacturer.

SAFETY

Although turning is considered to be a relatively safe pursuit, it is not free of dangers. Getting your fingers pinched between a spinning blank and a tool rest is only one hazard. Most turning accidents can be attributed to mounting a blank on the lathe improperly, or using inappropriate speed or tool techniques.

Carefully centre a blank on the spindle and check that you are using the proper speed for the job before you start turning. The speed must be compatible with the size and weight of the

workpiece. Never use a cutting tool for something it was not designed to do, and make sure your tools are sharp.

The safety accessories listed below are as important as sharp tools. Because of the large amount of chips and dust produced by turning, eye and face protection are essential. Wood dust packs some hidden hazards as well. Exotic woods, such as rosewood and tulipwood, produce toxic dust that can cause serious eye, throat and skin irritation.

Safety Accessories for Turning

- **Eye Protection**
  Flexible moulded plastic goggles or safety glasses protect eyes from flying debris and sawdust.

- **Clothing Protection**
  Three quarter length, wrap around smock or suitable short sleeved shirt keeps loose clothing out of the way and free of dust.

- **Dust Protection**
  Reusable dust masks which fit to the nose with adjustable head strap to protect against fine dust when sanding. A Racal Helmet for complete protection against dust and also provides eye protection. A dust extractor or fan.

- **Foot Protection**
  Wear suitable hard top enclosed footwear to protect from articles that may fall.

Turning Safety Tips and Warnings

- Do not wear loose clothes, necklaces, or rings, while turning: remember to roll up your sleeves.

- A person with long hair is required to wear a net or appropriate protection.

- Wear appropriate safety equipment at all times.

- Make sure the lathe is properly grounded and on its own electrical circuit and second switch near tailstock end.

- When finishing, do not use large cloths, as they may catch and pull your fingers into the work.

- Check the speed of your lathe before you turn it on; do not use excessive speeds.

- Ensure there is adequate lighting for your work. The lathe should have as much natural light as possible.

- Check for defects in the wood you are planning to turn; avoid blanks that have twists, splits, knots or loose bark.

- Always use the correct tool for the job.

- While turning, concentrate on the work at hand, and take frequent breaks to avoid fatigue.
- Always work with tools that are properly sharpened. Dull tools are more dangerous than sharp ones.
- Keep the tool rest as close to the workpiece as possible without interfering with your ability to use the tool properly; rotate the work by hand first to see that it turns freely.
- Stop lathe when adjusting the tool rest.
- Remove tool rest when sanding so as not to catch your fingers.
- Use appropriate protection against dust inhalation, dust mask, fan, dust extractor.
- Wear appropriate eye protection.
- Keep working area free of clutter. Stack jobs neatly for next process.
- Keep floor as clean as possible to reduce the danger of fire and personal injury.

Before you press the start button on the lathe

- Check the five **S's**

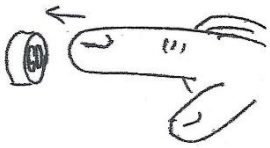

In no particular order – they are all important

Speed	Check that the last person, or yourself, has not left the lathe at high speed. This is particularly important if turning a large piece.
Safety Gear	Are you wearing all the necessary safety gear. Face shiels, goggles, glasses, dust mask.
Secure	Is the piece fixed securerly to the lathe. Tailstock tight, Faceplate screwed up, Chuck tight.
Spin	Spin the piece a full circle by hand. Does it clear all parts of the lathe, the bed, tool rest, etc.
Stand Away	be away from the line of fire when the lathe first starts up.

BUYING A LATHE

When you choose a lathe, consider carefully the type of turning you will be doing. Some models are made specifically for faceplate turning, in which the blank is secured only on the headstock. Lathe size is measured in two ways; swing and capacity. Swing is twice the distance between the headstock spindle and the bed, which limits the diameter of blanks. Capacity is the distance between the headstock and tailstock, which limits the lengths of blanks.

The weight of the lathe is important, as greater weight provides stability and dampens vibration. Another feature to consider is how easy it is to change speeds; large workpieces must be turned at

lower speeds than smaller ones. Changing the speed of some lathes involves switching a drive belt between two sets of stepped pulleys; others have variable speed pulley systems that allow the speed to be changed without switching off the lathe.

Type and Quality

The quality of the lathe is related to your skills and future ambitions. For an average hobbyist it is recommended training on a small machine before moving up, if and when you can justify the expense and effort that will be involved.

Look for a lathe with a swing 300mm that's a centre height of 150mm above the bed; and accept 915mm long stock between centres. Beware the many lightweight lathes competing for the amateur market. These have small shafts; less than 25mm in diameter and flimsy sheet metal rests, beds or stands that flex and never give the turner a chance.

LATHE TOOLS

You will need to buy a set of turning tools to do your work. These tools resemble wood chisels, except that they are tempered and shaped differently, with longer handles and blades for better control and leverage.

Tools can be divided into two basic groups; cutting and scraping tools. Cutting tools are used in spindle and faceplate turning, where the grain of the wood runs parallel to lathe's axis of rotation. These tools include gouges, chisels and parting tools. Scraping tools are used in faceplate turning for special applications, where grain runs perpendicular to the axis of rotation.

Traditionally, all turning tools were made of carbon steel, but this material has a tendency to overheat with grinding and continuous use. Turning tools made of high-speed-steel (HSS) retain their edge up to six times longer than carbon steel, making the additional expense worth it in the long run.

Whether they are made from high speed or carbon steel, tuning tools should always be kept sharp. A blunt tool is an accident waiting to happen.

There are many different types of woodturning chisel. Although they are often called "chisels" there are several different sub-groups, these are:

- Gouges
- Chisels
- Parting Tools
- Scrapers

The following is a guide to some of the most commonly used tools.

Gouges

- **Roughing Gouge**

A roughing gouge has a wide fluted blade used to initially round-off a square wooden spindle and to remove most of the excess material. Roughing gouges are for rapid wood removal from spindles and should never be used for bowls.

The roughing gouge's wide U-shaped cutting edge allows it to remove large amounts of wood very quickly. The bevel of its cutting edge is typically ground to between 40 and 45 degrees.

- **Spindle Gouge**

A spindle gouge is essentially a smaller roughing gouge and is used to remove excess material from your workpiece and to create curves (swells and hollows). A spindle gouge would be used in typically smaller, tighter areas than would be practical for a roughing gouge, or to shape a spindle before more intricate details are added.

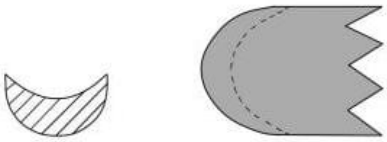

Note that the spindle gouge's flute is similar to the roughing gouges with the exception that it is shallower. Its cutting edge can be ground to an angle anywhere between 30 and 45 degrees. Many woodturners now grind the cutting edge to what is known as a "fingernail" shape as this makes the tool more versatile.

- **Bowl Gouge**

Bowl gouges are used in faceplate turning to hollow out bowls, platters, cups and various other hollow forms. They have a milled flute similar to a spindle gouge, but they are typically much thinner.

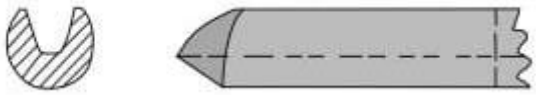

A bowl gouge's blade is very strong (typically milled from high-speed steel). The bowl gouge's blade needs to be very strong as much of it is often overhanging the tool rest when cutting into the hollow of a bowl.

Chisels

- **Square Nosed Chisel**

A square nose turning chisel is longer than a standard chisel and usually has only one bevel compared to a skew chisel's two. It has a flat cutting edge that is square to the sides of the blade.

Square Nosed Chisel 

The single bevel of the square nose chisel's cutting edge is usually ground to between 40 and 60 degrees.

- **Skew Chisel**

A skew chisel has a flat cutting edge that is skewed to one side. It is a very versatile tool that can be used with its blade lying down flat on the workpiece to plane (smooth over) rough areas, or it can be used resting on the thin edge of its blade to cut across the workpiece and to make V-grooves.

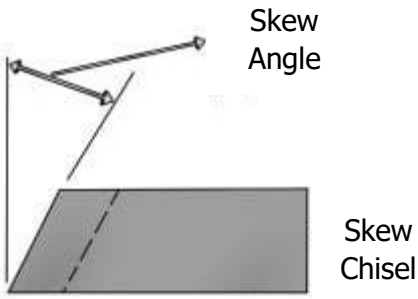

The angle of a skew chisel's cutting edge is typically 45 degrees. The bevels of its cutting edge are usually ground to somewhere between 25 and 55 degrees (12.5 and 27.5 degrees on each side).

Parting Tools

- **Plain (Rectangular)**

The plain/rectangular parting tool (sometimes called a "knife parting tool") is used in spindle turning to make thin cuts across your workpiece.

Plain (rectangular)

The plain parting tool's blade is typically shorter than other parting tools and has a rectangular cross-section. The blade is positioned with its narrow edge on the tool rest.

- **Fluted**

A fluted parting tool has a very distinctly shaped cutting edge and is used to impart beads – outwardly rounded shapes – and to cut partings into your workpiece.

Fluted

The blade is similar in shape to the plain parting tool, with the exception that it has a groove that runs the entire length of the blade which is used to make beads. These fluted blades come in a wide range of thicknesses allowing you to impart beads of various sizes.

- **Waisted / Diamond**

A waisted (or diamond) parting tool has a bevelled blade with a pointed tip. It is held with its narrow edge resting on the tool rest and is used to cut across a workpiece and to create partings. The tools' waisted (diamond) cross-section reduces friction between the sides of the tool and the parting cut.

Waisted

This works because even though the cutting edge gets full contact with the workpiece, the bevelled (sloping) sides of the blade are only in minimal contact at their widest (middle) points.

- **Square**

The square parting tool is used for beading work and to cut shallow partings across your workpiece. This tool is only for use with spindle turning.

Square

The blade of a square parting tool is broader than other parting tools and has a sturdy square cross-section. Its cutting edge is double-bevelled and typically ground to between 45 and 50 degrees.

Scrapers

- **Square Nose**

Scrapers are chiefly used in woodturning to create a final smooth finish to a bowl, cup or otherwise hollow form. The square nose scraper is frequently used to smooth the outside of a workpiece. The square nose scraper is positioned with its wide flat edge on the tool rest.

Square Nose

The square nose scraper's blade has a cutting edge which is square to its edges, and a single bevel, typically at 60-65 degrees. Its blade has a thick, heavy cross-section. Only the very tip of a scraper is used as it is for scraping away small amounts of wood rather than cutting channels or grooves.

- **Round Nose**

Round nose scrapers are used to shear and smooth the surface of a workpiece. They are frequently used in faceplate turning to smooth the inside surfaces of bowls and cups. They may also be used in spindle turning for smoothing coves.

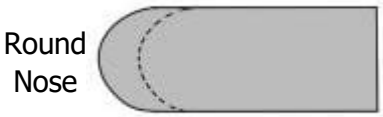

A top quality round nose scraper has a thick blade with a heavy rectangular cross-section. Its rounded cutting edge typically has a single bevel of between 60 and 65 degrees.

- **Half Round**

A half-round scraper is used for smoothing surfaces, frequently the internal portion of a bowl or other hollow form.

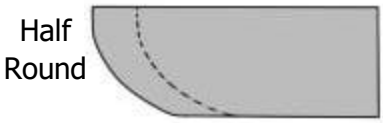

As the name suggests, the half-round scraper's blade has one flat side and one curved side. Like many scrapers, the blade is typically thick with a heavy rectangular cross-section and a single ground bevel of between 60 and 65 degrees.

MEASURING AND MARKING TOOLS

Despite its visual appeal and emphasis on *"feel"*, as a method of judging progress of a workpiece, wood turning is an exact craft. To obtain the required precision, the headstock of your machine must run smoothly and true, and the workpiece carefully centred.

- **Combination Calliper**
  Feature a set of inside callipers at one end and a set of outside callipers at the other, usually for sizing lids to fit turned boxes.

- **Outside Callipers**
  Used to determine thickness of spindle and faceplate work.

- **Inside Callipers**
  Used to determine the inside diameter of hollow turning.

- **Dial Callipers**
  Usually used to measure wall thickness; make precise inside and outside measurements.

- **Double-Ended Callipers**
  Feature a set of outside callipers on each end. A dimension taken at one end is automatically transferred to the other. Callipers do not need to be removed from the workpiece to make measurement.

- **Compass**
  Used to scribe a circle on a blank.

- **Centre Finder**
  Quickly locates the centre of a square.

Build Your Own Centre Square

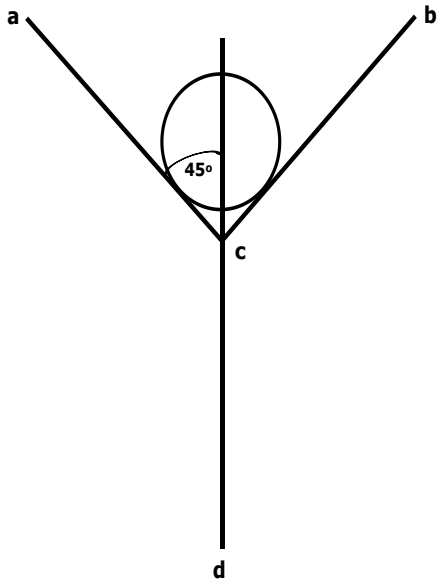

Spend half an hour making a centre square and you will be able to find the centre of any bowl turning disc up to 380mm diameter.

A "Y" with the limbs 30mm wide is cut from a 150mm square of 10mm plywood on which the diagonal has been marked.

A strip of hardwood 380mm x 6mm is fixed to the diagonal by means of two 12mm x 4 gauge countersunk screws.

Measurements (a-c) and (b-c) checked to be equal and the angle of (c) to be 45°. Screw number (1) should be inserted first at point (c), and measurements checked before inserting screw number (2) at point (c).

Round off the corners, drill a hole to hang it up, give it a coat of varnish and you have another useful tool to add to your collection.

The following points should be kept in mind when using a centre square. The most accurate results are obtained when the lines drawn across the disc are roughly at right angles to each other.

Second, discs cut from damp or not fully seasoned timber will have shrunk during drying out and, since the greatest shrinkage takes place across the grain, the disc will have become oval shape. In this case, the line should be placed as nearly as possible along and across the grain for the best results.

TOOL SHARPENING

There is an old saying that "when something goes wrong a good tradesman never blames his tools". A good tradesman knows that to do his job properly one's tools must be in the best possible condition to perform the task for which they were designed. In the case of woodworking tools this means they have to be "sharp". Sharp tools are easier to use: safer to use and produce

a better finish, thus saving time sanding and finishing. It is recommended that before trying to sharpen tools for the first time that you take a course in sharpening.

SPINDLE TURNING

Most spindle work starts with a square blank. The more perfect the square, the better. By starting with blanks that are straight, free from defects, square on the jointer, and properly centre on the lathe, can avoid catching a tool on the workpiece or splitting the wood.

The keys to smooth spindle work are using proper tool control and cutting in the direction of the wood grain. Stance and body movement are just as important as how you hold a tool. A good working stance is to stand with your feet apart and completely balanced. Your body should be able to move smoothly with the tool. Never stand so far away from the lathe that you are forced to lean forward. With thicker workpieces, your hips and elbows can provide support for the tool.

While spindle turning is a relatively safe operation, remember not to become too casual in your approach. Improperly used, the lathe can cause injury like any other woodworking machine.

Mounting a Blank Between Centres

1. Marking the centre of the blank

To mount a blank on a lathe for spindle turning, you need to find the centre of each end. First make sure the blank is square, then hold it on end and mark two lines across from corner to corner. Repeat the operation on the other end. This line intersects at the centre. Next use a spur drive centre and a mallet to make indentations at both points. Align the centre point or the drive centre over the centre on the end of the blank and strike it sharply with the mallet; make sure the spurs bite into the wood. Repeat at the other end. Insert the drive centre in the headstock of the lathe. Do not strike the drive centre while it's mounted in the headstock as this could damage the lathe bearings.

For better security go to the trouble of diagonally cutting with a tenon saw. Cut a groove of sufficient depth to locate the drive centre.

2. Mounting the blank on the lathe

To mount the blank between centres, start by butting one end against the tailstock's live centre. Support the other end of the blank with one hand, slide the tailstock toward the headstock until the spurs of the drive centre engage with the indentations you made in step 1. Secure the tailstock in place with the locking lever, then advance the tailstock spindle and live centre by turning the handwheel until the blank is held firmly between centres. Secure the tailstock spindle in place with the spindle lock.

3. Adjusting the tool rest

Align the tool rest parallel to the blank, positioning it close top the workpiece without making contact when the blank spins. With the switches off, rotate the blank by hand to make sure it does not hit the tool rest. The gap between the tool rest and the blank should be the same at both ends; adjust the rest if necessary. Although experienced turners adjust the

height of the tool rest according to personal preferences, a good place to start is with the tool rest at or below centre of the blank. This way, your tools will cut above the centre of the blank. Tighten the tool rest in position with the locking lever.

Basic Tool Control

1. Rubbing the bevel

The first rule of tool control in turning is to make sure the blades bevel rubs against the stock as the cutting-edge slices into the wood. This principle is the key to producing a smooth, clean cuts with tools such a spindle gouge or skew chisel. To master this basic technique, unplug the lathe and mount a cylindrical blank between centres. Brace a tool, in this case a roughing gouge, on the tool rest so that the bevel rests on the stock, position the body to the lefthand or righthand of the tool rest, not in front. Gripping the tool in one hand, tilt the handle down. Using your free hand to rotate the blank in a clockwise direction; the bevel should run smoothly against the work.

2. Starting the cut

Once the bevel is rubbing, slowly raise the tool handle; the cutting edge should begin to slice the wood. You can control the depth of the cut by the height of the handle; the higher you raise it, the more wood you will remove. But do not go so far that the bevel stops rubbing against the wood, or the tool will catch on the spinning blank.

3. Cutting with the wood grain

Wood is composed of bundles of fibres aligned in one direction, called the grain direction. Just as pushing a hand plane against the grain will cause tear-out, working against the grain with a turning tool will produce rough cuts and can lead to kickbacks. The smoothest spindle turning cuts are made in a downhill direction, from a high point to a low point on the workpiece. Such cuts are either with, across, or at right angles to the grain. *Never cut uphill, or the tool will dig into the wood*. This will cause splintering and shearing of wood fibres, and will leave a rough surface on the blank.

Lathe Speed

Set the speed of the to match the size of the workpiece and process in hand; roughing, general cutting, and finishing. The table below provides a guide to safe working speed for the size of the workpiece and operation.

WOODTURNING – LATHE SPEED			
Diameter of Work	**Roughing Off**	**General Cutting**	**Finishing**
Under 50mm	900 to 1300 rpm	2400 to 2800 rpm	3000 to 4000 rpm
50mm to 100mm	600 to 1000 rpm	1800 to 2400 rpm	2400 to 3000 rpm
100mm to 150mm	600 to 1000 rpm	2200 to 1800 rpm	1800 to 2400 rpm

100mm to 200mm	400 to 600 rpm	800 to 1200 rpm	1200 to 4800 rpm
200mm to 25mm	300 to 400 rpm	600 to 800 rpm	900 to 1200 rpm
Over 250mm	300 rpm	300 to 600 rpm	600 to 900 rpm

BASIC SPINDLE CUTS

The basic spindle cuts include roughing, planing, peeling, V-cuts, shoulder cuts, and parting off. Four tools are used for most spindle cuts; the roughing gouge, spindle gouge, skew chisel, and parting tool. They are typically held in one of two grips; overhand or underhand. The overhand grip is commonly used to guide the tool along the tool rest, such as when roughing down a blank, the underhand grip is used for finer control, such as when making V-grooves.

One bonus of spindle turning is that you can see the results of your cut as you go. As you gain experience, you will also become familiar with the various sounds of the turning process. From your first roughing cut to your final planning cut, there is a different sequence of sounds produced as wood is being turned. By listening closely to the succession of sounds emitted by the lathe, you will be able to use your ears, as well as your eyes, to assess the progress of your work.

Turning Order

1. Roughing out the cylinder

Mount your blank between centres and set your speed appropriate for the size of the workpiece (refer Table above). Holding a roughing gouge with an overhand grip, brace the blade on the tool rest. Cut very lightly into the bark, making sure the bevel is rubbing against the stock and move the gouge smoothly along the rest – if your blank is longer than your tool rest, rough out the cylinder in two or more steps. The gouge will begin rounding the corners of the workpiece. Continue making deeper passes along the blank, raising the handle of the tool with each pass, until the edges are completely rounded and you have a cylinder. Adjust the position of the tool rest as you progress to keep it close to the blank.

2. Finishing the cylinder

Once one section of the blank is cylindrical, reposition the tool rest round over the rest of the workpiece. To check the smoothness of the blank, set the bottom of the gouge blade on the spinning blank. The blade should ride smoothly on the surface. If it bounces the surface is not yet perfectly round.

3. Planing the cylinder

Use a skew chisel to plane the cylinder to a smooth finish. Holding the tool with an overhand grip, set the blade on the rest so that its long point is above the blank and the bevel is inclined in the direction of the cut; this is typically about 65° to the axis of the wood. Switch on the lathe and raise the handle slightly, bring the cutting edge of the chisel into contact with the wood. Move the blade along the tool rest; letting its bevel rub; do not let the heel or the long point dig into the wood. The centre of the cutting edge should produce a series of thin shavings.

4. Cutting the cylinder to length

Once you have planed the cylinder smooth, use a parting tool to cut it to length. Make a cutting line on the spinning cylinder with a pencil. Then, holding a parting tool edge up on the tool rest, raise the handle slightly until the blade cuts into the blank. Clean up the end grain with a skew chisel. If you have further shaping to do on the blank, cut about two thirds of the way through the cylinder so that it remains on the lathe. If all you wish to make is a cylinder, continue the cut to near the centre of the blank, then turn off the lathe and cut away the cylinder with a handsaw.

Making Tapers

1. Making sizing cuts

If you are not copying a particular piece, make a hardboard template of the taper. Turn your blank into a cylinder, them make the sizing cuts with a parting tool in the centre and each endo the blank, check each cut with callipers pre-set measurement. Holding the parting tool with an underhanded grip edge up on the tool rest, raise the handle slightly so the blade cuts into the cylinder. Continue to raise the handle until the cut reaches the required depth. Each cut should penetrate to the finished diameter of the workpiece at that point; check your progress with callipers. Twist he tool slightly form side to side as you make the cut in order to minimise friction and to prevent the blade from jamming.

2. Checking the depth of the sizing cut

Adjust a pair of outside callipers to one of the diameters of the taper as marked on your template. Check the diameter of the blank at the corresponding sizing cuts. Deepen the cut, if necessary, until the measurements on the template and the diameter of the cut are equal. Repeat for the remaining sizing cuts. *Stop the lathe when measuring your sizing cuts.*

3. Roughing out the taper

Once you have finished all the sizing cuts, use a roughing gouge to clear out the waste between the cuts. Follow the same procedure you would use to rough out a cylinder, holding the tool in an overhand grip and always working in a downhill direction to avoid tear-out. Joining the size cuts will create a taper along the length of the workpiece. Use of a skew chisel to plane the taper smooth, again working in a downhill direction.

Making Decorative V Grooves

Turn a cylinder, then mark the location of the grooves with a pencil. Make the cuts with a skew chisel. At each location of the mark, start with the long point of the chisel pointing forward and raise the handle, allowing the point of the blade to cut to the required depth. Make a cut on each side of the initial cut, arcing the chisel to the side so a portion of the bevel rubs against the edge of the groove. To widen the groove, repeat the cuts.

Coved Shoulder Cuts

Coved shoulder cuts are a common feature of chair legs. To make the cut, start by scribing a shoulder line around the four sides of the blank, to separate its round and square sections. Turn the round section of the blank to a cylinder, tapering the leg if desired. Next use the spindle gouge to turn the coved shoulder. Holding the tool in an underhanded grip at an angle to the blank, align its bevel with the direction of cut and its flute with the shoulder line. Raise the handle and pivot the tool on the tool rest, making a slicing cut *"downhill"* towards the tailstock end. Define the cove with a series of deeper cuts.

Square Shoulder Cuts

1. Turning the shoulder

Mark the shoulder on the blank and turn the round section into a cylinder, leaving the square section intact. Use a skew chisel to clean up the transition between the square and the round segments of the workpiece. Start by holding the tool edge up so that the long point and part of the bevel are aligned with the shoulder line. Slowly raise the handle, making a clean slicing cut down to the round portion of the workpiece.

2. Clean up the shoulder

Set the chisel's flat on the round section and carefully touch the heel of the cutting edge against the shoulder to cut away the remaining waste.

Cutting Coves

1. Making the first cut

Outline the cove on the blank with a pencil. Then, hold a spindle gouge in an underhanded grip with the flute pointing sideways and slice into the wood just inside one of the marked lines with the cutting edge of the tool only. Slowly angle the tool handle back towards the line until the bevel rubs on the workpiece, and make a scooping cut down to the middle of the cove. As you make the cut, turn the handle to rotate the bevel against the workpiece. The gouge should be flat on its back when it reaches the centre of the cove.

Rather than continuing the cut and turning the remaining half of the cove in an uphill direction, make a second downhill cut opposite the first.

2. Making the second cut

With the gouge on its side and positioned inside the other marked line for the cove, start the new cut as you did for the first one. Then align and rotate the spindle gouge in the opposite direction to bring the bevel in contact with the stock.

3. Widening the cove

Repeat steps one and two, making a series of deeper cuts from right and left that meet at the bottom of the cove. Continue cutting back to the marked lines until the cove is complete.

Turning Beads with a Spindle Gouge

1. Turning the bead

Decorative beads can be turned with a spindle gouge, skew chisels, or beading tools. With the gouge, the technique for turning beads is the reverse of cutting coves, reflecting the differences in their profiles. Start by outlining the bead on your blank with a pencil. Begin at the centre, or the highest point of the bead, hold the gouge flat and perpendicular to the work so that the bevel is rubbing. Raise the handle and make a downhill cut, rotating the tool in the direction of the cut and angling away from the cut. The gouge should finish on its cut resting on its side. Repeat for the other side of the bead, angling and rolling the tool in the opposite direction.

2. Turning round shoulders

Whether the bead will stand alone or be part of a series of beads, blend it into the turning by making round shoulders on each side of it. Simply repeat step 1 to turn a half bead beside the full bead.

Turning Beads with a Skew Chisel

1. Defining the bead

A skew chisel enables you to turn beads with sharp detail. Outline the bead with a pencil, the make a V-cut on each line. You can use either the long or short point of the chisel, but the long point usually makes the job easier. Then, working on one of the V-cuts, widen one side of the cut, slowly lifting the handle so the bevel rubs and the long point of the chisel makes a rounded, rolling out. Repeat for the other side of the bead in the opposite direction.

2. Completing the bead

Repeat step 1 as necessary to smooth the beads shape. Then turn a round shoulder on each side of the bead to blend it into the other elements of the turning.

Turning Beads with a Beading Tool

Because its blade is smaller, a beading tool provides even finer control for turning for small beads than either a spindle gouge or skew chisel. Starting in the centre, or highest point of the bead, hold the tool flat and perpendicular to the blank so that its bevel is rubbing. Raise the handle and make a downhill cut, rotating the tool in the direction of the cut and angling it away. The beading tool should come to a rest on its side. Repeat for the other side of the bead, angling and rolling the tool in the opposite direction.

TURNING FILLETS, V-GROOVES, COVES AND BEADS

Instructions on how to turn Fillets, V-Grooves, Coves, and Beads is on the following pages:

Turning Fillets

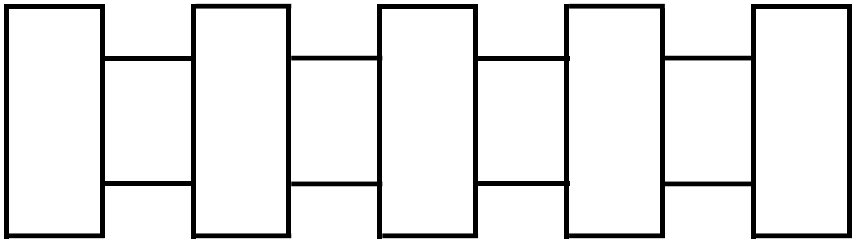

Procedure

1. Mark the centre of each end of the blank.
2. Check drive centre and machine speed.
3. Position tailstock and lock in position.
4. Place blank between centres, tighten and lock.
5. Position tool rest. Lock. Turn blank by hand to ensure the workpiece does not touch the tool rest.
6. Check all tools. Ensure correctly sharpened.
7. Set callipers to 36mm.
8. Start the lathe. Turn a cylinder using a gouge. Stop lathe, reset tool rest.
9. Turn cylinder to 36mm. Check to ensure workpiece is straight.
10. Stop lathe, mark off fillets with a pencil.
11. Set callipers to 26mm. Using a parting tool, perpendicular to the workpiece, make a shallow cut on each pencil line.
12. Using a parting tool, cut on the recess side of the line to the required depth. Check depth from time to time.
13. Remove waste with square chisel. Check diameter with callipers.
14. Stop lathe. Remove tool rest and sand lightly, seal with sanding sealer.
15. Repeat exercise three times.

Turning V-Grooves

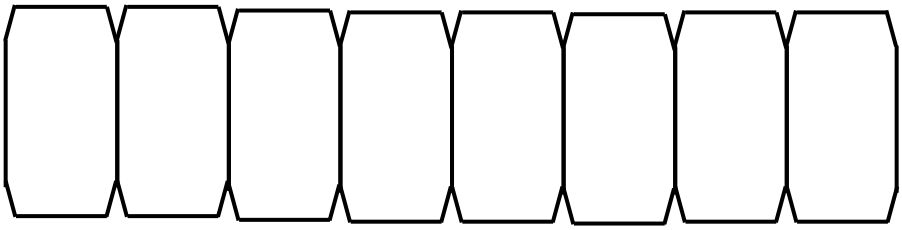

Procedure

1. Mark the centre of each end of the blank.
2. Check drive centre and machine speed.
3. Position tailstock and lock in position.
4. Place blank between centres, tighten and lock.
5. Position tool rest. Lock. Turn blank by hand to ensure the workpiece does not touch the tool rest
6. Check all tools. Ensure correctly sharpened.
7. Set callipers to 45mm.
8. Start the lathe. Turn a cylinder using a gouge. Stop lathe, reset tool rest.
9. Turn cylinder parallel to 45mm. Check to ensure workpiece is straight.
10. Stop lathe, mark out Vs with a pencil.
11. Set callipers to 35mm. Using a skew chisel, perpendicular to the workpiece, make a cut on each pencil line to the required depth.
12. Complete V-cut on each side of the initial cut, arcing chisel to each side of the groove. Repeat the side cuts to widen the groove.
13. Stop lathe. Remove tool rest and sand lightly, seal with sanding sealer.
14. Repeat exercise six times.

Turning Coves

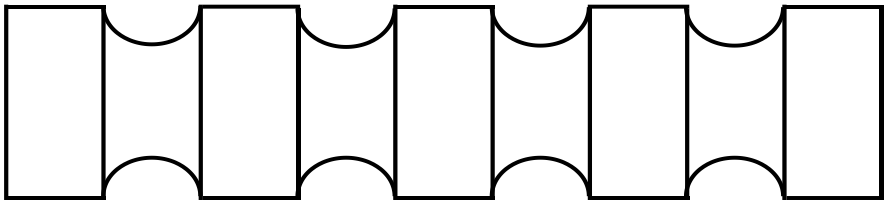

Procedure

1. Mark the centre of each end of the blank.
2. Check drive centre and machine speed.
3. Position tailstock and lock in position.
4. Place blank between centres, tighten and lock.
5. Position tool rest. Lock. Turn blank by hand to ensure the workpiece does not touch the tool rest
6. Check all tools. Ensure correctly sharpened.
7. Set callipers to 45mm.
8. Start the lathe. Turn a cylinder using a gouge. Stop lathe, reset tool rest.
9. Turn cylinder parallel to 45mm. Check to ensure workpiece is straight.
10. Stop lathe, mark out coves with a pencil.
11. Set callipers to 21mm. Using a spindle gouge, using a rolling action cut coves inside the marked lines.
12. Repeat. Making a series of deeper cuts from right and left that meet at the bottom of the cove. Continue cutting back to the marked lines until the cove is complete.
13. Stop lathe. Remove tool rest and sand lightly, seal with sanding sealer.
14. Repeat exercise three times.

Turning Beads

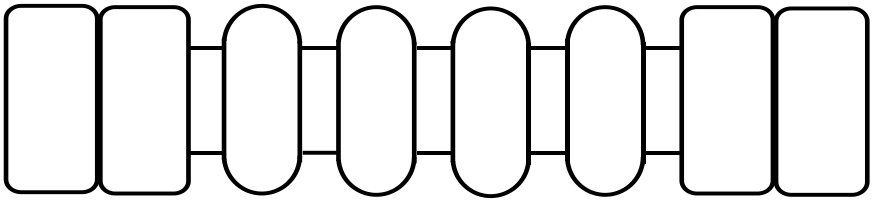

Procedure

1. Mark the centre of each end of the blank.
2. Check drive centre and machine speed.
3. Position tailstock and lock in position.
4. Place blank between centres, tighten and lock.
5. Position tool rest. Lock. Turn blank by hand to ensure the workpiece does not touch the tool rest
6. Check all tools. Ensure correctly sharpened.
7. Set callipers to 45mm.
8. Start the lathe. Turn a cylinder using a gouge. Stop lathe, reset tool rest.
9. Turn cylinder parallel to 45mm. Check to ensure workpiece is straight.
10. Stop lathe, mark out beads with a pencil.
11. With a parting tool, cut fillet to depth of 40mm, using callipers.
12. Using a spindle gouge, perpendicular to the workpiece, cut downhill from the centre, rotating the tool in the direction of the cut. Repeat for the other side of the bead, rotating tool in the opposite direction.
13. Remove shoulders of each bead to the depth of the fillet.
14. Stop lathe. Remove tool rest and sand lightly, seal with sanding sealer.
15. Repeat exercise three times.

EXERCISES

Vase

Procedure

1. Select timber 100mm square x 230mm long.
2. Turn cylinder and square off ends.
3. Maker dovetail spigot to suit chuck.
4. Remove and mount onto chuck.
5. Support with tailstock.
6. Shape vase body and top.
7. Drill hole and complete top of vase.
8. Sand lightly and seal with sanding sealer.
9. Remove from lathe
10. Make a jam chuck and finish base.
11. Sand lightly and seal with sanding sealer.

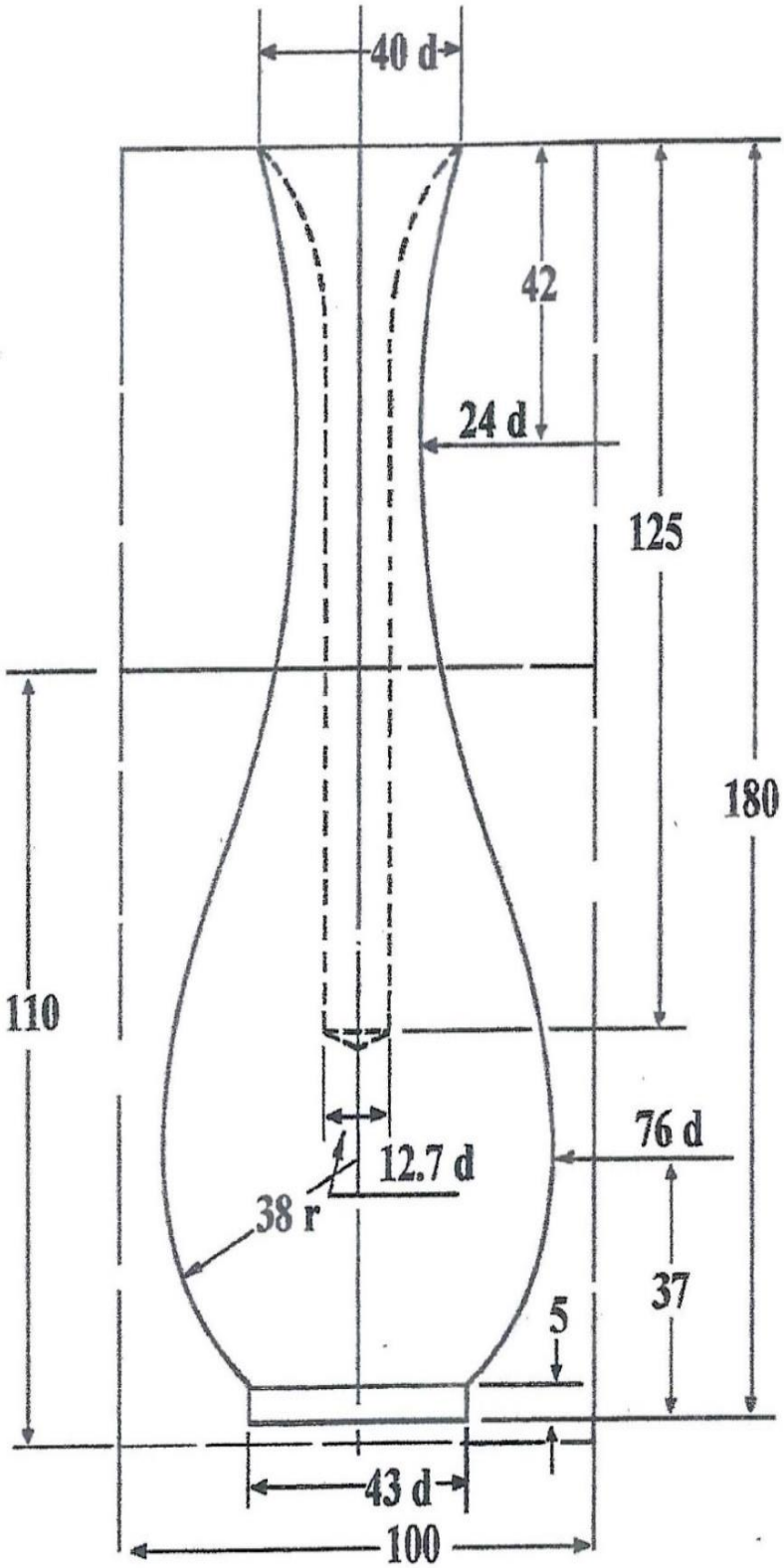

Toilet Roll Holder

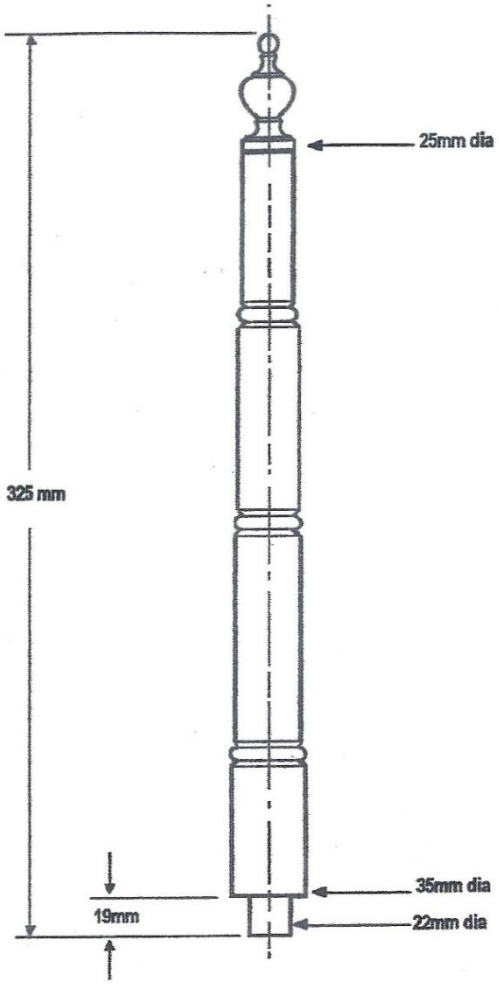

Spindle

1. Select timber 40mm square x 400mm long. Mark the centre of each end of the blank.
2. Check drive centre and machine speed, position tailstock. Place blank between centres, tighten and lock.
3. Position tool rest. Lock. Turn blank by hand to ensure workpiece does not touch tool rest.
4. Check all tools. Ensure correctly sharpened.
5. Start lathe. Turn a cylinder. Stop lathe, reset tool rest as required. Check to ensure workpiece is straight.
6. Mark out as per diagram. Shape spindle. Cut spigot to fit into the base.
7. Stop lathe. Remove tool rest and sand lightly, seal with sanding sealer. Part off and complete by hand.

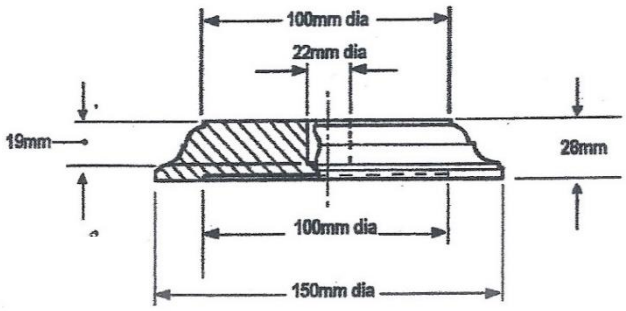

Base

1. Select timber 150mm square x 40mm thick.
2. Scribe a circle using a compass and cut out on a band saw.
3. Mount onto a screw chuck.
4. Turn bottom and cut a recess to suit the chucks dimensions.
5. Sand and seal with sanding sealer.
6. Remove from lathe and replace screw chuck with expanding jaws chuck. Remount workpiece in the lathe.
7. Turn face and machine hole in the base to fit spindle firmly.
8. Sand likely and seal with sanding sealer.
9. Glue spindle into base.

Turning Chisel Handle

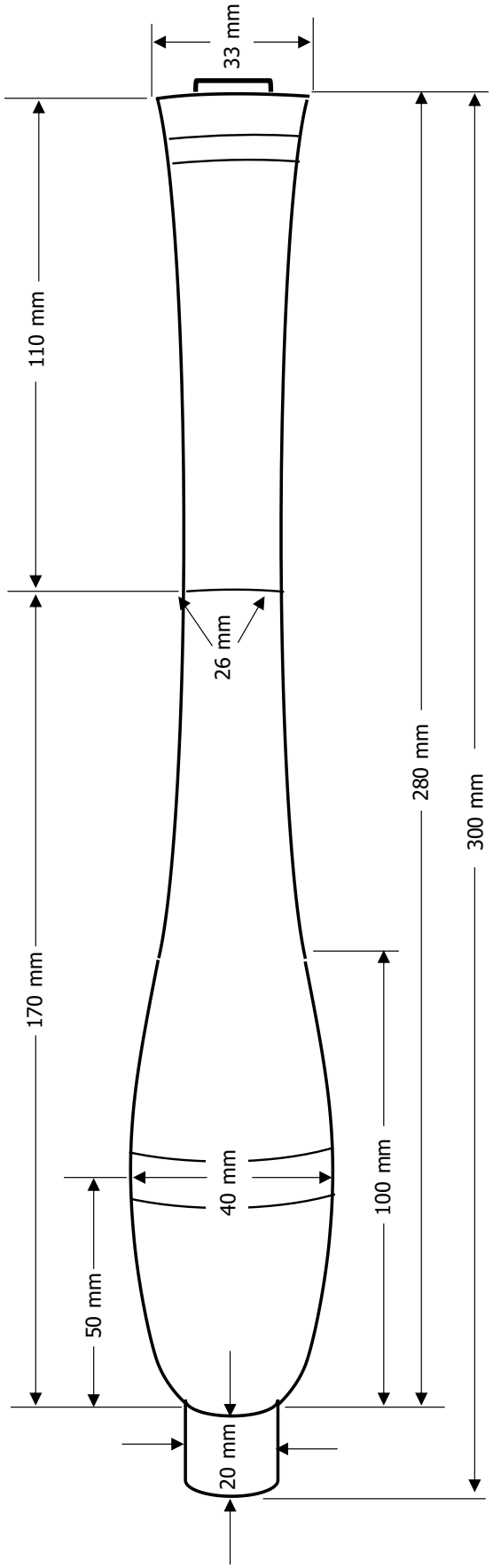

Procedure

1. Select timber 45mm square and 350mm long.
2. Mark the centre of each end of the blank.
3. Hold blank perpendicular secured in a vice. Drill hole in the centre of one end of the blank to desired size (6-8mm)
4. Check drive centre and machine speed, position tailstock.
5. Place blank between centres, tighten and lock.
6. Position tool rest. Lock. Turn blank by hand to ensure workpiece does not touch tool rest.
7. Check tool. Ensure correctly sharpened.
8. Start lathe. Turn a cylinder using a gouge. Stop lathe, reset tool rest as required.
9. Turn cylinder to 40mm diameter. Check to ensure workpiece is straight.
10. Stop lathe and mark out as per diagram.
11. Shape job.
12. Stop lathe. Remove tool rest and sand lightly, seal with sanding sealer.
13. Part off.
14. Finish ends by hand.

Rolling Pin

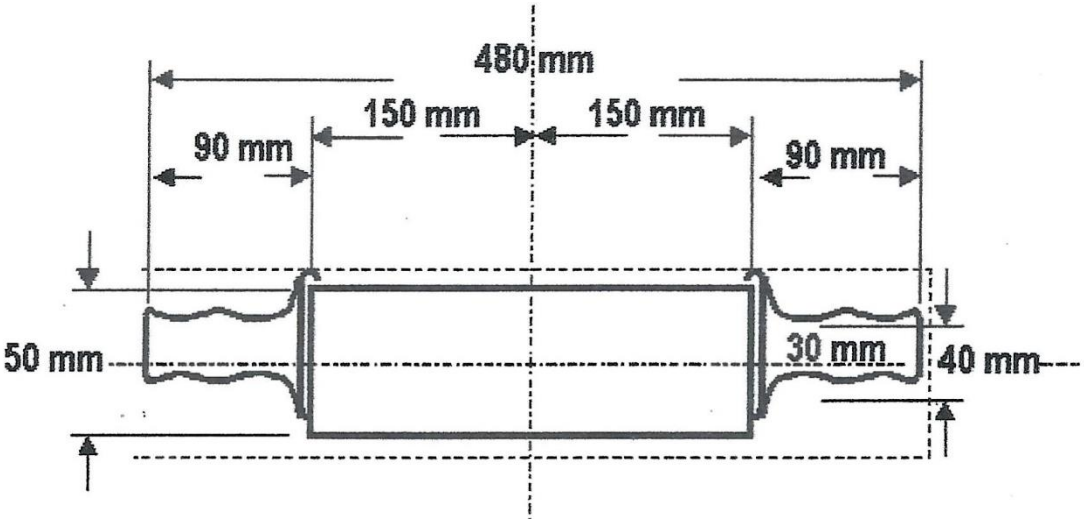

Procedure

1. Select straight grained timber, 60mm square x 500mm long.
2. Mark centre on each end of the blank.
3. Check drive centre and machine speed, position tailstock.
4. Place blank between centres, tighten and lock.
5. Position tool rest. Lock. Turn blank by hand to ensure workpiece does not touch the tool rest.
6. Check tools. Ensure correctly sharpened.
7. Star lathe. Turn cylinder using a gouge. Stop lathe, reset tool rest as required.
8. Turn cylinder to 50mm diameter. Check to ensure workpiece is straight.
9. Stop lathe. Mark out as per diagram.
10. Shape job.
11. Stop lathe. Remove tool rest and sand lightly, seal with sanding sealer.
12. Part off.
13. Finish ends by hand.

Simple Bowl

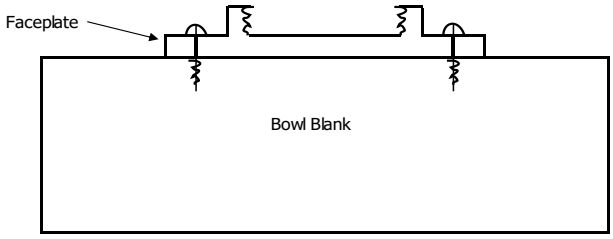

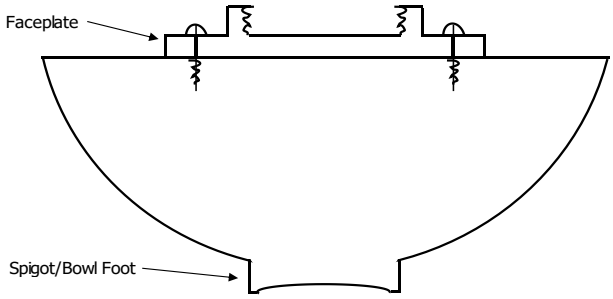

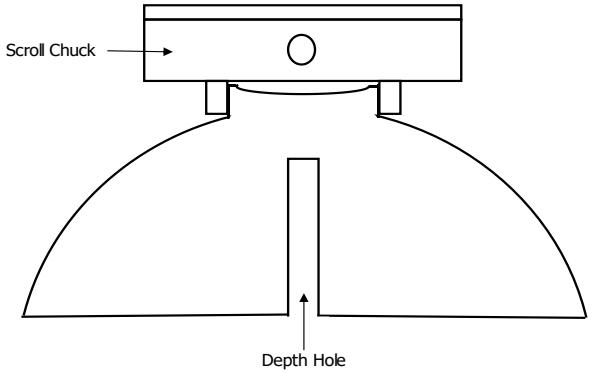

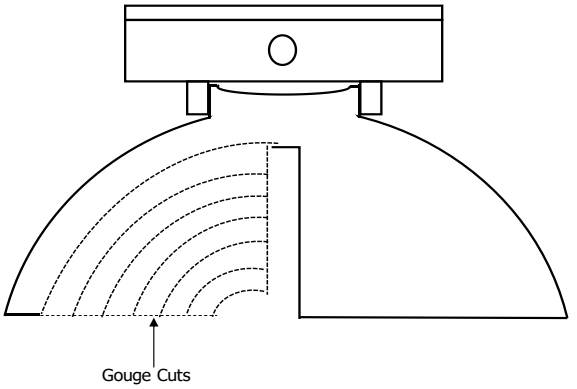

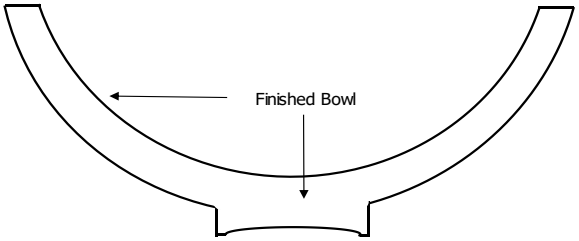

1. Screw the prepared round bowl blank to a faceplate.
2. Shape outside profile making sure size of spigot, which will, become foot of bowl, is suitable for scroll chick.
3. Sand outside profile and apply wax finish if desired.
4. Unscrew faceplate and locate spigot/bowl foot in scroll chuck.
5. Drill hole to appropriate depth.
6. Remove from bowl using bowl gouge and final refinement with round nose scraper. Endeavour to achieve even thickness of wall.
7. Sand and apply wax finish if desired.

Candle Holder

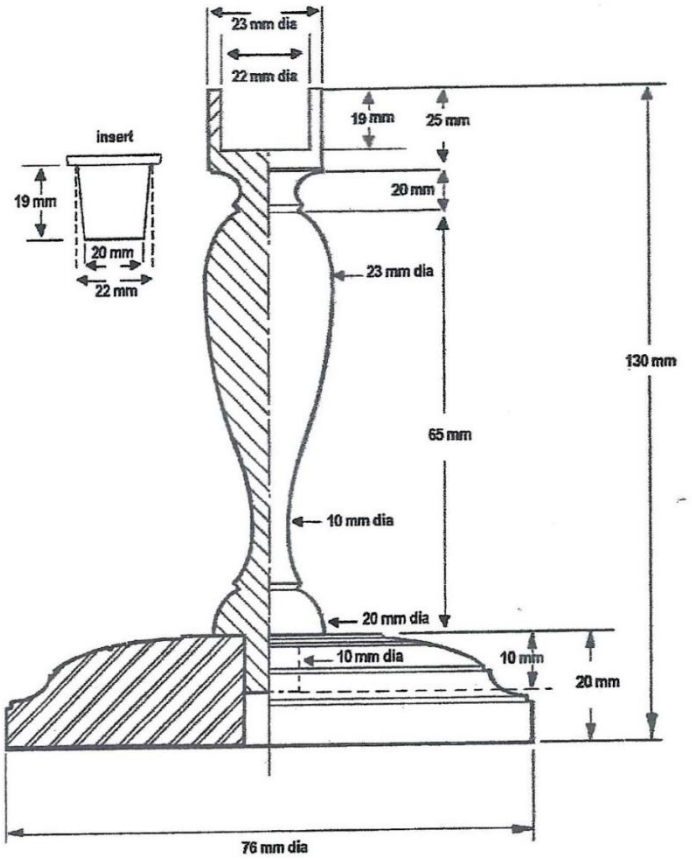

Spindle

1. Select timber 25mm square x 170mm long.
2. Mark the centre of each end of the blank.
3. Check drive centre and machine speed, position tailstock.
4. Prepare a plug 22mm diameter x 25mm deep and drill hole 22mm diameter x 19mm deep in tailstock end, fir with plug, ensure a tight fit, mark centre.
5. Place blank between centres, tighten and lock.
6. Position tool rest. Lock. Turn blank by hand to ensure it does not touch the tool rest.
7. Check all tool. Ensure correctly sharpened.
8. Start lathe. Turn a cylinder using a gouge. Stop lathe, reset tool rest as required
9. Turn cylinder 23mm diameter. Check to ensure workpiece is straight.
10. Mark out as per diagram.
11. Shape job, using callipers to measurements from drawing.
12. Stop lathe. Remove tool rest and sand lightly, seal with sanding sealer.
13. Part off.

Base

1. Select timber 80mm square x 25mm thick.
2. Scribe a circle using a compass and cut out on a bandsaw.
3. Mount onto screw chuck.
4. Turn bottom and cut recess to suit your chuck dimensions.
5. Sand and seal with sanding sealer.
6. Remove from lathe, replace screw chuck with expanding jaws chuck. Remount workpiece.
7. Turn face and machine hole in base to fit spindle firmly.
8. Sand and seal with sanding sealer.
9. Glue spindle into base.

FINISHING

There is a widespread belief among wood turners that if a turning needs to be sanded, then the tools used to produce it either dull or used improperly. There is more than a little truth behind this opinion; a clean and smooth turning needs no sanding. A surface cut cleanly by tools is superior to a sanded surface; sanding inevitably scratches a spindle turning because it is performed against the grain. To make matters worse, a finish will only magnify the blemishes.

Until you develop into a proficient enough turner to skip sandpaper altogether, use it sparingly, only smooth the wood, never to actually shape it. Start with 100 grit and work up to 400 grit. Whenever possible, sand the bottom of the turning as it spins on the lathe. Should the paper catch, it will be thrown clear of the lathe instead of pulling your hand over the turning.

Spindle turning is best finished right on the lathe. Applying a lacquer-based sanding sealer whilst the lathe is stopped, when dry approximately two minutes, start the lathe and burnish with a soft clean cloth before choosing one of the finishes listed below. A good finish seals the wood from dust and moisture while bringing out the natural beauty of the wood. Because they tend to obscure rather than enhance grain, stains are rarely used. Turnings are often finished with a combination of oils and wax finish, although higher gloss finishes, such as lacquer can be applied.

As with sanding on lathes, run the machine at a slow speed to avoid splashing, always keep the tool rest clear of the work and finish the turning from underneath. Avoid using large cloths, as they can get snagged a pull your fingers into to spinning work.

Type of Finish	Finishing Product	Characteristics	Method of Application
Penetrating Oil	Tung Oil and Danish Oil	Natural finish that penetrates the wood and hardens to a thin, moisture resistant film as it dries. Used for general spindle turning, penetrating oils build up a transparent matte to semigloss finish with repeated applications.	Applied with cotton cloth.
Non-Toxic Penetrating Oils	Walnut Oil, Salad Oil and Mineral Oil	These are natural oils. Walnut oil and Salad oil are used on kitchen implements and salad bowls, mineral oil is used on turned toys such as children's rattles.	Applied with cotton cloth.
High Gloss Finish	Lacquer and Shellac	Solvent release finishes that dry quickly to a clear hard finish; a glossy finish can be built up with repeated applications, used on vase, bowls, platter and speciality turning where a high gloss is desired.	Lacquer is brushes or sprayed on and burnished with cotton cloth and fine abrasives. Shellac is applied with cotton cloth and fine abrasives.
Waxes	Carnauba, Beeswax and Paste Wax	Used on general spindle turning to seal and protect oiled workpieces while imparting a high polish.	Applied with cotton cloth; carnauba can be applied by stick.

TIMBERS WE COMMONLY USE

At Bribie Woodies, we source as much locally available timber for slabbing and seasoning as we can store within our complex. The most common timbers available to us are (Southern) Silky Oak, Bribie Island Pine (Coastal Cyprus), Camphor Laurel, various Pines, Mango and Jacaranda. We do obtain other timbers in small quantities but those listed above are the most commonly available. Below is some detailed information on some of the timbers we collect and use.

SOUTHERN SILKY OAK (*Grevillea robusta*) is thought to be native to Australia but now can be found in many countries both North and South of the equator. At Bribie Woodies, our Silky Oak seems to be used mainly for furniture although it does turn nicely. The main reason for its availability is that it is often planted in urban and suburban areas where, after 20 to 30 years, it outgrows its usefulness and becomes more of a nuisance. The tree is often referred to as just Silky Oak, however, it should not be confused with Northern Silky Oak (*Cardwellia sublimis*) which is a different tree in appearance, although the wood is somewhat similar.

BRIBIE ISLAND PINE (*Callitris columellaris*) is found in many coastal locations around Eastern Australia, although it is most common between Coffs Harbour in northern NSW and Hervey Bay in QLD. It is actually a Cypress and has many common names and include Coast Cypress, Coastal Cypress, Cypress Pine, Dune Cypress, Murray Pine, Northern Cypress Pine, Sand Cypress, Western Cypress and White Cypress Pine. It is a very dense timber and holds moisture for a long time after it has been cut. The seasoning process can take many years and there is about 10% to 20% loss due to surface cracking during this period. When machined, the surface is beautifully textured and very smooth. It is used extensively in wood turning, carving and the making of craft items. So long as the timber has been fully seasoned, it makes beautiful furniture. The timber is easy to work and finish.

CAMPHOR LAUREL (*Cinnamomum virens*) is not a native to Australia, having been introduced from Asia in 1822 as an ornamental tree. The timber is extremely popular in craft work due to its beautiful colour, figure and aromatic nature. It is also popular with cabinetmakers for drawer bases and the like due to its insect repellent properties. The tree itself is a large evergreen tree that grows up to 30m tall. Camphor is a white, crystalline substance obtained from the tree. It is native to Taiwan, Japan, China and Indochina, where it is also cultivated for camphor and timber production. It has since become a weed throughout Queensland and Central to Northern NSW. It is used by woodworkers for turning and crafting furniture. Formerly it was used to construct camphorwood chests. Camphor has been used for many centuries as a culinary spice, a component of incense, and as a medicine.

JACARANDA (*Jacaranda mimosifolia*) is not a native to Australia, having been introduced from the high plains of Brazil, Paraguay and Argentina. This fast-growing, deciduous tree can reach 15m in height with a spread of up to 15m and has a broad, rounded crown. There are around 50 species of the Jacarandas the most common one found in Australia being the Jacaranda mimosifolia. All species have fern-like leaves and bell-shaped flowers which may be white, purple or mauve-blue.

Jacaranda is a most popular timber, very much sought after by woodworkers and craft people. The seasoned timber is blond in colour with a fine grain. It is a beautiful timber to turn and carve, it glues well and is very popular with pyrographers, particularly due to its colour and close grain. Unfortunately, if the Jacaranda timber is exposed to ultra violet light, it does yellow and/or darken over time if not finished with an ultra violet clear coating.

TIMBER CHARACTERISTICS

Common Name	Characteristics	Workability
Almond, Peach, Cherry (all prunus family)	Hard, fine texture, straight grained, varying colours, turns very well,	Easy to work. Stains well and can be polished to fine finish.
Black Bean	Hard and heavy, straight grained, rich brown in colour with greyish streaks, turns well.	Not easy wood to work, although hard soft patches of the wood can crumble if cutting edges are not kept sharp. Stains well and can be polished to a fine finish.
Blackwood	Medium, even textured, straight grained but can be interlocked and wavy, lustrous golden brown to dark brown colour, turns well.	Straight grained is easy to work, irregular grain can be difficult, stains well and produces a fine finish when polished.
Bribie Pine (Cyprus Pine)	Soft, even textured, deep yellow to reddish brown colouring and is resinous. It can be knotty, with resin ducts that show as dark lines on the surface. Turns well.	Works well, although knots can be difficult, can split badly. Takes varnish satisfactorily, but resinous wood should be treated with sealer.
Brown Alder	Soft even texture, pale yellow to reddish brown in colour. Turns well. Suitable for small articles.	Works well, but sharp cutting edges need to be maintained to prevent tearing grain. Takes a stain well and can be brought to a good finish with polish.
Brush Box	Very fine, even textured wood. Hard, dense and heavy. Can have straight or irregular grain. Pale yellow in colour.	Hard wood to work but cuts very cleanly with sharp tools. Stains well and polishes to a fine finish.
Camphor Laurel	Fine, even textured, aromatic timber, golden brown, highly figured with dark brown colour-streaked markings caused by fungus. Turns very well.	Fairly easy to work, a favourite with wood turners. Hidden blemishes in timber can be difficult. Caution required, toxicity. Finishes well.
Celery Top Pine (Tasmania)	Fine, even texture, pale brown in colour with attractive grain pattern, works well.	Reasonably easy to work and can be brought to a fine finish.
Coachwood	Fine, even textured, aromatic timber, close interlocking grain. Pale pink in colour. Turns well.	Reasonably easy to work and can be to a fine finish. Warps unless quarter cut.
Crows Ash	Hard and coarse but generally straight grained wood, colour varying to almost white to pale brown.	Works well but requires a keen cutting edge. Can be brought to a fine finish. Stains and polishes well. Caution required, toxicity.

Common Name	Characteristics	Workability
Huon Pine (Tasmania)	Fine, straight grained aromatic wood, pale cream in colour without much grain variation. Darkens when aged. Turns well.	Easy to turn and can be polished to a fine finish.
Ironwood	Very hard and heavy wood. Fine uniformed texture and closely interlocking grain. Dark greenish brown to black in colour in sharp contrast to cream coloured sapwood. Excellent for turning.	Very difficult to turn but can be brought to a fine burnished finish.
Jacaranda	Beautiful, hard and heavy wood with medium texture. Usually straight grained, it is highly figured with rich brown colour-streaked markings. Turns well.	Relatively difficult to work and dulls quickly the edge of cutting tools. It burnishes very well to a fine natural finish, oiled or polished.
Jarrah	Hard, heavy wood with medium coarse texture. Usually straight grained, but can be wavy or interlocked. Narrow yellowish white sapwood and light to deep red brown heartwood. Turns very well.	Moderately difficult to work. Polishes very well and particularly suited to an oil finish.
Kauri Pine	Straight grained wood, with fine even texture and lustrous surface. Colour varies from pale cream brown to pinkish brown. Turns extremely well.	Works well and can be brought to a fine smooth surface. Takes stain well and can be polished to an excellent finish.
Lilly Pilly	Suitable for turning small articles, grain and colour varies depending on variety.	Finishes well.
Mahogany	Medium textured wood with straight grained even or interlocked grain. Reddish brown to deep red. Turns well.	Works well and cuts cleanly. Stains very well and polishes to a fine finish after grain filling.
Maple	Hard, heavy, straight grained wood with fine texture. Colour varies from white to reddish brown. Turns reasonably well.	Difficult to work particularly when grain is irregular (quilted and fiddleback). Stains and polishes satisfactorily.
Paulownia	Fine to medium texture. Usually straight grained, sometimes irregular. Displays attractive purple colour, darkening to rich brown. Excellent turning.	Bark is very stable. Do not allow to get too dry. Finishes well.
Poinciana	Varying colours and grain accents. Turns well.	Wood is subject to borers and fungus stains. Stains well and can be brought to a fine finish.
Purpleheart	Fine to medium texture. Usually straight grained, sometimes irregular. Displays	Works moderately well but quickly dulls cutting edges. It takes stain,

Common Name	Characteristics	Workability
	attractive purple colour, darkening to a rich brown. Excellent turning.	and finishes well with wax polish. Spirit based polish can affect natural colour.
Queensland Walnut	Wood usually has interlocked and wavy grain, producing an attractive figure. Colour can vary from a light to dark brown, with pinkish to greyish streaks. Difficult to turn.	Difficult to work because of the dulling effect on cutting edges, but can be brought to a smooth finish. Polishes very well to a fine finish. Most goes to veneer.
Red Ash	Medium, generally straight grained wood, colour varying to almost white to pale brown.	Works well but requires keen cutting edge. Can be brought to a fine finish. Stains and polishes well. Caution required, toxicity.
Red and White Cedar	Relatively soft, aromatic timber, with straight grain and coarse texture. Reddish brown in colour, fading to silver grey. Turns fairly well.	Although soft and brittle, it is easily worked, splits easily along the grain. Takes stain well and can be brought to a good finish. Caution with toxicity and dust can be a problem.
Rosewood	Beautiful, hard and heavy wood with medium texture. Usually, straight grained and is highly figured with rich brown to violet brown colour streaked with black. Turns well.	Moderately difficult to work and dulls quickly the cutting edge of tools. Can be burnished to a fine natural finish, oiled or polished. Sought mostly as cabinet timber.
Sassafras	Brittle soft wood, coarse in texture, straight grain, light to dark brown in colour. Turns reasonably well.	Keep cutting edge very sharp, wood tends to split easily. Finishes well.
Silky Oak	Coarse even textured wood, usually straight grained with large rays. Reddish brown in colour. Pink tones in immature trees.	Works well but ray cells can tear when planing. Sapwood is prone to borers. Stains well and polishes satisfactorily.
Silver Ash	Medium, generally straight grained wood, colour is pale almost white to silver. Turns very well.	Works well but requires keen cutting edge. Can be brought to a fine finish. Stains and polishes well. Caution required, toxicity.
Tallowwood	Hard and dense wood, straight grain. Dark to medium brown in colour. Used mainly for flooring.	Moderately difficult to work, finishes extremely well.
Tasmanian Oak	Hard, medium textured, straight grained wood, subject to blood veins, used mainly for cabinet timber.	Difficult to turn, stains well and polishes satisfactorily.

Common Name	Characteristics	Workability
Teak	Coarse uneven texture. The grain can be straight or wavy. Colour varies from golden brown to darker and more marked. Turns well.	Works well but quickly dulls cutting edges of tools. Can be stained, varnished, polished and finishes well with an oil finish.
Wattle, Sallly OK not all wattle	Hard, even texture, straight grained, varying colours from brown to plum. Larger trees good for turning.	Difficult to work but can be brought to a fine finish.

WOOD DUST AND TIMBER TOXICITY

Wood dust can be defined as tiny particulates of wood produced during the processing and preparation of natural timbers, particle boards, medium density fibre boards (MDF) or laminated products such as plywoods and beams. The micro fine dust particulates released can very easily be inhaled. Woodworkers are at persistent risk of breathing in large amounts of damaging fine wood dust particulates whenever timber is being handled or machined in any workspace environment.

For example, wood dust can be a serious problem whenever an activity involves:

- Sawing, routing, woodturning, drilling, and sanding;
- Cleaning down with compressed air;
- Dry sweeping of floors, walls, ceiling fans or machinery; and
- Disturbing dust when repairing machines or during routine maintenance work.

There are health concerns associated with many timber products used in woodworking workshops. In particular, the processing of these timbers and the volumes of wood dust that can result pose the majority of health concerns. Studies show that wood dust particulates should never be considered as merely "nuisance dust". Exposure can actually be very harmful to peoples' health.

The International Agency for Research on Cancer (IARC), as part of the World Health Organisation (WHO), has found that wood dust can be directly linked to some very serious health concerns. Exposure to wood dust from some of the commercially available native and imported timber species can often have a very devastating effect on individual woodworkers' health.

The physical symptoms and the damaging health-related consequences of excessive exposure to wood dust in the workshop are many and varied:

- Allergic skin irritation, itching, dermatitis, eczema, urticarious (hives), eye irritation and inflammation;
- Dust may also irritate the upper respiratory tract and cause sinus and rhinitis, throat irritations, shortness of breath, hoarseness and coughing, asthma, pneumonia, and even bronchitis. Chronic lung irritations may result in permanent wasting of the tissue;

- The most sinister quality of wood dusts is that some may be carcinogenic (likely to cause cancer). Tannins and lignin-related compounds occur naturally in wood and are strongly believed to be carcinogenic. They are more abundant in hardwoods and Australian native hardwoods such as the Acacia's and Eucalyptus species which have high tannin contents;

In Australia all wood dust is now classified as carcinogenic (liable to cause cancer). Some timber species may also contain other biological or chemical contaminants in the wood sap, bark, leaves or roots or that have been applied, prior to commercial sale, as a fungicide or insecticide. To date, because of identified work health and safety risks, there are two (2) timber species that have been classified as totally unsuitable and should NOT be used for woodworking:

- Oleander or Rose Laurel (*Nerium oleander*)

- Western Red Cedar (*Thujaplicata*)

COMMON SPALTED WOODS are those which show decorative black lines or dark grain markings within the timber. This usually occurs in pale hardwoods such as maple, birch and beech. These markings can be regarded as a mould or fungal environment and, as such, can cause health problems such as serious lung diseases. They should be worked and sanded only when wearing a dusk mask or respirator. Be careful in selecting the species used for making kitchen utensils, food storage containers, or toys an infant might chew on, as heat, moisture and time stimulate the release of the toxins found in some of these timbers.

"BAG-SEASONED" TIMBERS (i.e., unfinished turning projects stored in plastic bags) may also generate a spore environment. This may promote sensitisation and result in allergic reactions. It should also be remembered that any second hand or re-cycled wood products may have been previously coated with varnishes, lacquers, polishes, preservatives and other unknown chemicals. These may well cause serious harm to human health under some circumstances, and woodworkers should be observant and aware that these unforeseen chemical hazards may be present.

The following table provides an overview of possible health risks associated with a wide range of timbers that are currently available in Australia.

Timber Toxicity		
Common Name	**Area of Origin**	**Possible Health Hazards**
Alpine Ash	Australia	Irritation to nose, eyes and throat, Dermatitis.
Mahogany	North, South and Central America, Mexico and plantations in Fiji	Skin irritation, giddiness, vomiting, furunculosis (boils on the skin)
Blackbean	Australia	Dermatitis, itchiness, irritation of mucous membranes
Blackwood	Australia and plantations in South Africa	Dermatitis, asthma, irritation to nose and throat

Timber Toxicity		
Common Name	**Area of Origin**	**Possible Health Hazards**
Coolabah Eucalyptus	Australia	Bark and dust may cause skin irritation
Crows Ash	Australia and New Guinea	Dermatitis
Douglas Fir, Oregon	USA, Canada, New Zealand plantations, Australia and Europe	Dermatitis, nasal cancer, irritation to nose and throat
Ebony	Africa, Ceylon, South East Asia and Malagasy	Skin inflammation, acute dermatitis, sneezing and conjunctivitis
European Beech	Europe	Nasal cancer and dermatitis
European Boxwood	Southern Europe and Asia Minor	Dermatitis, irritation to nose, eyes and throat
European Walnut	Europe and Asia Minor	Dermatitis, nasal cancer, irritation to nose and throat
European Elm	Europe	Dermatitis, nasal cancer, irritation to nose and throat
Grey Box Eucalyptus	Australia	Eczema and irritation of mucous membranes
Jarrah Eucalyptus	Australia	Irritation to nose, throat and eyes
Meranti red, white and yellow	South West Asia	Dermatitis, irritation to nose, throat and eyes
Messmate	Australia	Dermatitis, asthma and sneezing
Miva Mahogany	Australia	Congestion of lungs, eye inflammation, irritation of mucus membranes, nose bleed, headaches and loss of appetite
Mountain Ash Eucalyptus	Australia, plantation in South America, Africa and Europe	Dermatitis, irritation to nose, throat and eyes
Mulga	Australia	Wood contains virulent poisonous principles, dust may cause irritation to mucous membranes, headache and vomiting
NZ White Pine Oak	New Zealand, Europe, Japan and China	Dermatitis, nasal cancer, sneezing and irritation to the nose and throat
Poison Walnut	Australia	Bark very irritative to skin, dust may cause breathing problems, giddiness, vomiting and dermatitis
Port Oxford Cedar	USA	Dermatitis

Timber Toxicity		
Common Name	**Area of Origin**	**Possible Health Hazards**
Red Cedar	Australia, South East Asia, New Guinea and India	Violent earaches, giddiness, cramps, asthma, bronchitis, dermatitis and irritation of mucous membrane
Redwood	North America	Dermatitis and asthma
Rimu	New Zealand	Irritation to nose and eyes
Rosewood	South East Asia and New Guinea	Dermatitis and asthma
South American Cedar	Central and South America and Mexico	Irritation to nose and throat, asthma, dermatitis and nasal cancer
Silky Oak	Australia and New Caledonia	Sap may cause blistering of skin, inflammation of eyelids and dust may cause dermatitis
Spotted Gum, Sweet Gum	Australia and South America	Dermatitis
Teak	South and South East Asia and plantations in most tropics	Dermatitis, conjunctivitis, over sensitivity to light, swelling of scrotum, nausea and irritation to throat and nose
Western Cedar	Canada and USA	Asthma, dermatitis, nasal cancer, nose bleed, giddiness and stomach pains
White Cedar	Eastern North America	Dermatitis
White Baltic	Europe	Asthma and skin irritation
White Cyprus Pine	Australia	Dermatitis, swelling of eyelids, asthma, nasal cancer, furunculosis and throat irritation
Yellow Gum	Australia	Irritation to nose and throat
Yew	Europe and Asian Minor	Dermatitis, headaches, congestion of lungs, nausea, fainting, visual disturbance and irritation of mucous membranes

Bribie & District

Woodcrafters

Association Inc